Metro LED LIGHT & SIGN

# LED WALL PACK LIGHT

# LED Wall Pack

## ML-WP-120WB1

## FEATURES

- IP65 Internal driver
- UL Certified
- High CRI
- 100-277Vac 50/60Hz
- Operating Temperature: -20o TO 45o

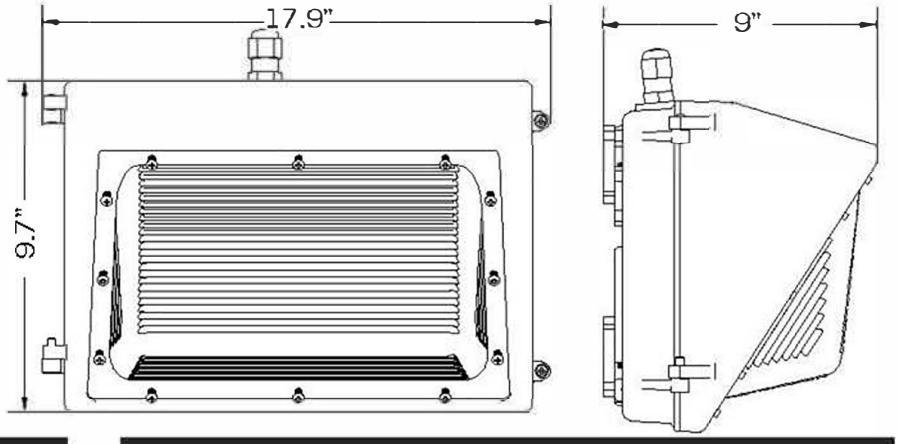


## ADVANTAGES

- No UV or IR in the beam
- Easy to install and operate
- Energy Saving, long lifespan
- Instant Start. NO Humming
- Green and eco-friendly without mercury

## APPLICATIONS

- Entrance Lighting
- Courtyard Lighting
- Outdoor Landscape Lighting
- Industrial lighting
- Buildings/Hotels/AreaWall Lighting

4224 Northeast Expressway Atlanta, GA 30340

888.533.7860 ● www.metroled.com ● info@metroled.com

# TECHNICAL DATA SHEET

## LED Wall Pack

## ML-WP-120WB1

| INPUT POWER | INPUT VOLTAGE | LUMEN | VIEWING ANGLE | LUMEN EFFICANCY | PF | CRI | CCT |
|---|---|---|---|---|---|---|---|
| 120W | 100-277Vac (50/60Hz) | 12600-13800Lm | 110° | 115-125Lm/W | >0.9 | >80 | 3000K,3500K,4000K, 4500K,5000K,5700K |

Luminosity Intensity Distribution Diagram

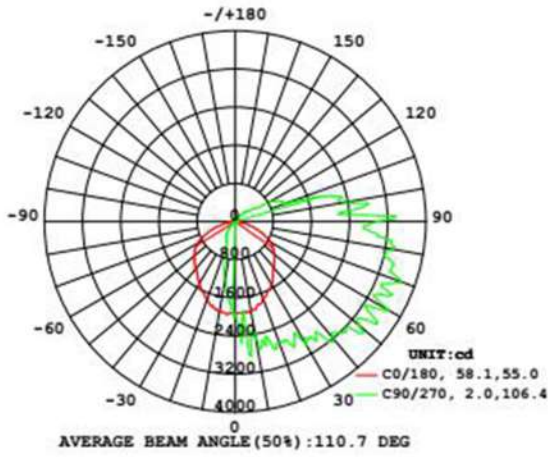


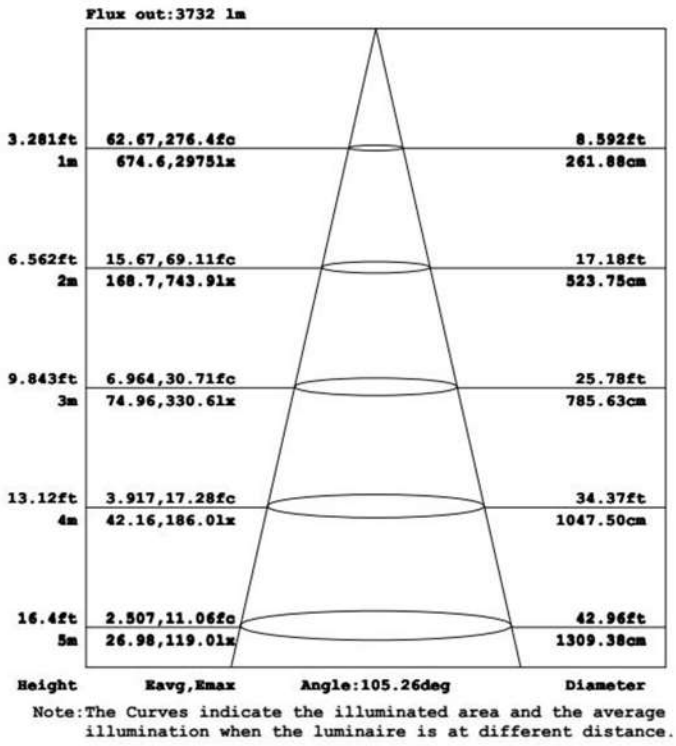


Note:The Curves indicate the illuminated area and the average illumination when the luminaire is at different distance.

4224 Northeast Expressway
Atlanta, Ga 30340
888.533.7860
info@metroled.com
www.metroled.com